Hazard Warning Switch Circuit

DESCRIPTION

When the TVIP system is changed to the alarm sounding state from the armed state, turn signal flasher relay will be switched ON and the hazard warning lights will start blinking.

WIRING DIAGRAM

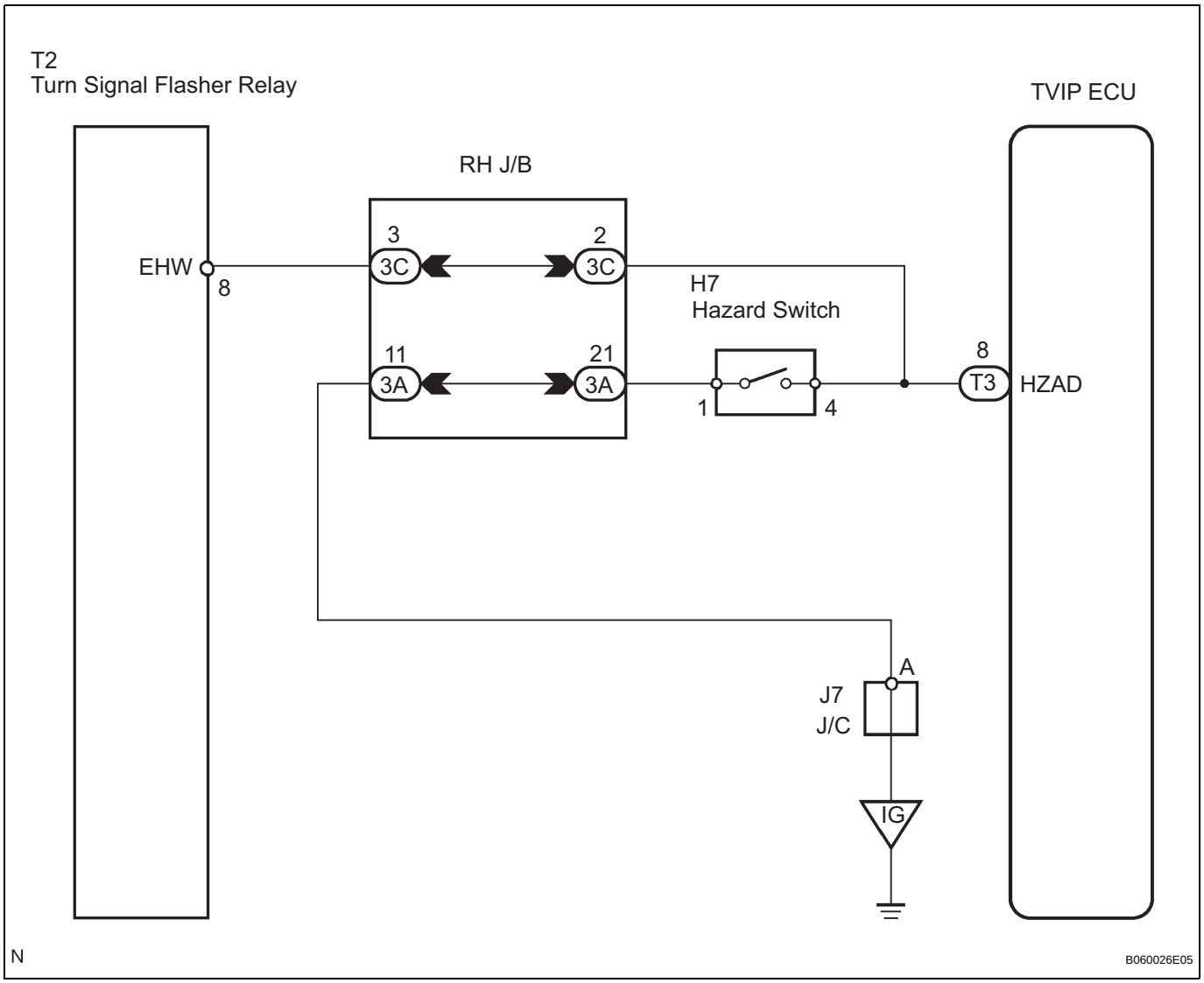

TD

TD

INSPECTION PROCEDURE

1 CHECK HAZARD WARNING SIGNAL SWITCH ASSEMBLY

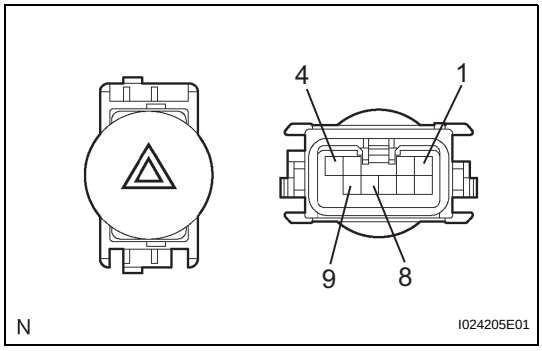

(a) Measure the resistance according to the value(s) in the table below.

Standard resistance

Tester Connection	Switch Condition	Specified Condition
-	OFF	Below 1 Ω
1 - 4	ON	Below 1 Ω
8 - 9	Illumination circuit	Below 1 Ω

NG → **REPLACE HAZARD WARNING SIGNAL SWITCH ASSEMBLY**

OK

2 CHECK TURN SIGNAL FLASHER ASSEMBLY

(a) Check turn signal flasher assembly (See page LI-44).

NG → **REPLACE TURN SIGNAL FLASHER ASSEMBLY**

OK

3 CHECK HARNESS AND CONNECTOR (TVIP ECU - TURN SIGNAL FLASHER)

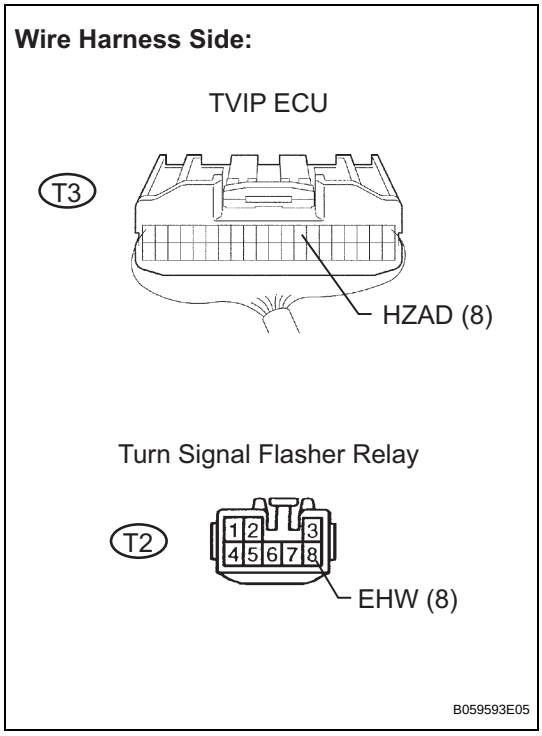

(a) Disconnect the TVIP ECU and turn signal flasher connectors.

(b) Measure the resistance according to the value(s) in the table below.

Standard resistance

Tester Connection	Specified Condition
HZAD (T3-8) - EHW (T2-8)	Below 1 Ω

NG → **REPAIR OR REPLACE HARNESS OR CONNECTOR**

OK

4	CHECK HARNESS AND CONNECTOR (HAZARD WARNING SWITCH - BODY GROUND)

Wire Harness Side:

Hazard Warning Switch

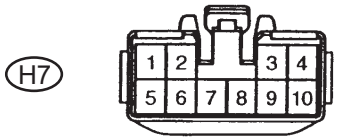

B059190E01

(a) Disconnect the H7 hazard warning switch connector.
(b) Measure the resistance according to the value(s) in the table below.

Standard resistance

Tester Connection	Specified Condition
H7-1 - Body ground	Below 1 Ω

TD

NG → **REPAIR OR REPLACE HARNESS OR CONNECTOR**

OK

REPLACE TVIP ECU